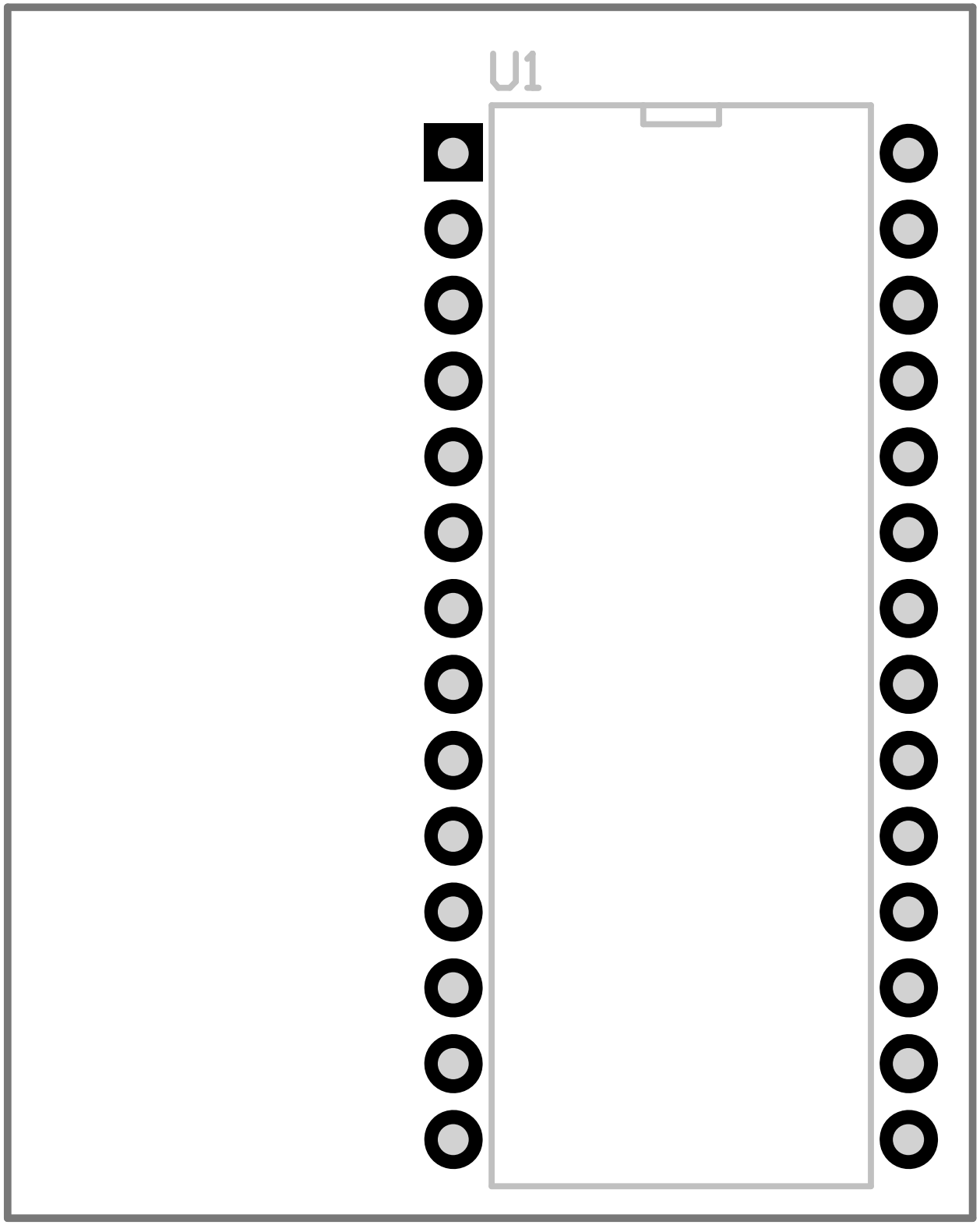
U1

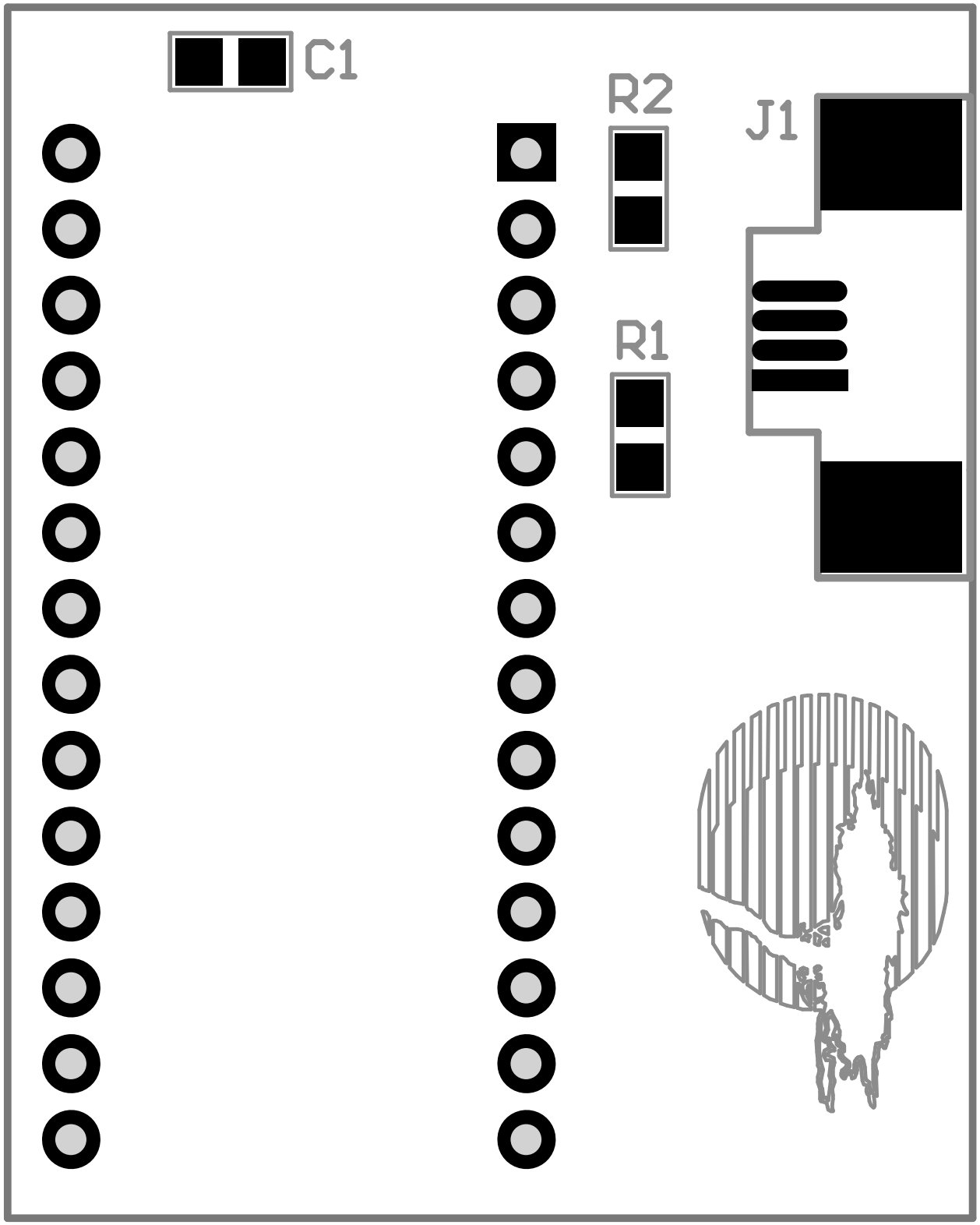
C1
R2
J1
R1

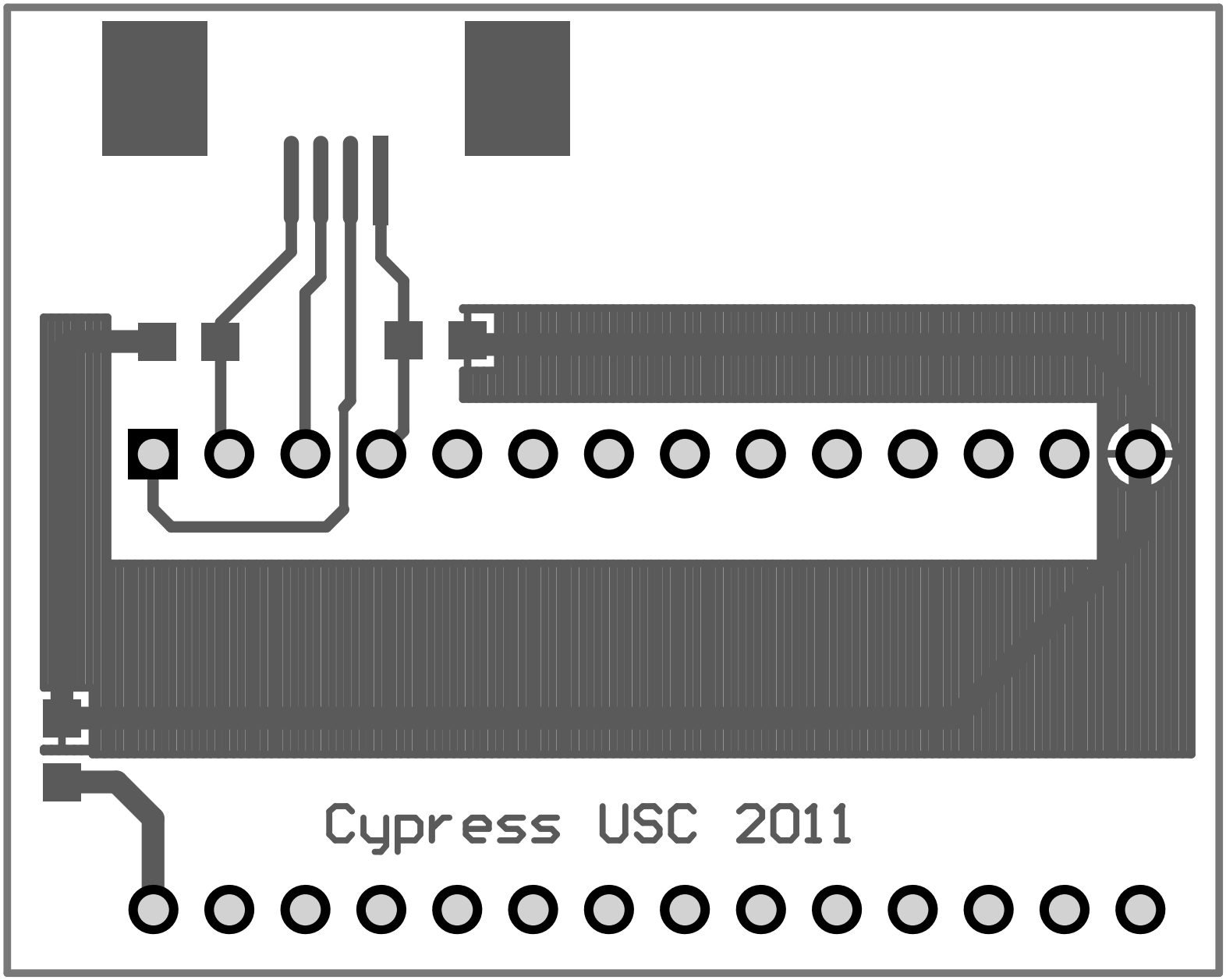
Cypress USC 2011